SUPPLEMENTARY DATA

EXTENDED EXPERIMENTAL PROCEDURES

Urine protein extraction

Whole urine proteins were isolated by a standard protocol. Briefly, urine proteins were lysed in buffer consisting of 7 M urea, 2 M thiourea, 4% CHAPS, 65 mM DTT and 0.2% Biolyte (Bio-Rad, Richmond, CA) by sonication on ice. After sonication, the lysates were centrifuged (10 000 g, 1 h, 4°C) and the supernatants were collected. The protein concentration of the supernatant was assayed with a standard Bradford protein assay kit (Bio-Rad, Richmond, CA). 100 µg of protein sample was reduced with 10 mM DTT (Sigma, St Louis, MO) at 37°C for 2.5 h and alkylated with 50 mM iodoacetamide (Sigma, St Louis, MO) at room temperature for 40 min. After diluted in a solution of 50 mM NH4HCO3 (Sigma, St Louis, MO), the protein mixture was digested by sequencing grade modified trypsin (Promega, Madison, WI) using a 1: 50 enzyme: protein ratio at 37°C for 20 h. The tryptic peptide mixture was lyophilized and kept at -80°C until use.

Automated 2D-Nano-LC-ESI-MS/MS Analysis of Peptides

All the extracted peptides were desalted using a 1.3 ml C18 solid phase extraction column (Sep-Pak® Cartridge) (Waters Corpoation, Milford, USA). The peptides were dried using a vacuum centrifuge and then resuspended with loading buffer (5mM Ammonium formate containing 5% acetonitrile, pH 3.0), separated and analyzed by two-dimensional (2D) strong cation-exchange (SCX)/reversed-phase (RP) nano-scale liquid chromatography/mass spectrometry (2D-nanoLC/MS). The experiments were performed on a Nano Aquity UPLC system (Waters Corporation, Milford, USA) connected to an LTQ Orbitrap XL mass spectrometer (Thermo Electron Corp., Bremen, Germany) equipped with an online nano-electrospray ion source (Michrom Bioresources, Auburn, USA).

A 180 µm×2.4 cm SCX column (Waters Corporation, Milford, USA), which was packed with a 5 µm PolySULFOETHYL Aspartamide (PolyLC, Columbia, MD, USA) was used for the first dimension. To recover hydrophobic peptides still retained on the SCX column after a conventional salt step gradient, a RP step gradient from 5% to 50% acetonitrile (ACN) was applied to the SCX columnl. A 15 µl plug was injected each time to form the step gradients. At last, 1 M Ammonium formate (NH4FA) was used to clean the SCX column once. The plugs were loaded onto the SCX column with a loading buffer at a 15 µl/min flow rate for 6 min. A 15 µl peptide sample was loaded onto the SCX column before the gradient plugs were injected. The eluted peptides were captured by a trap column (Waters) while salts were diverted to waste. The trap column (2 cm×180 µm) was packed with a 5 µm Symmetry® C18 material (Waters). The RP analytical column (15 cm×100 µm) was packed with a 1.7 µm Bridged Ethyl Hybrid (BEH) C18 material (Waters), and was used for the second dimension separation. The peptides on the RP analytical column were eluted with a three-step linear gradient. Starting from 5% B to 40% B in 40 min (A: water with 0.1% formic acid; B: ACN with 0.1% formic acid), increased to 80% B in 3 min, and then to 5% B in 2 min. The column was re-equilibrated at initial conditions for 15 min. The column flow rate was maintained at 500 nL/min and column temperature was maintained at 35°C. The electrospray voltage of 1.9 Kv versus the inlet of the mass spectrometer was used.

LTQ Orbitrap XL mass spectrometer was operated in the data-dependent mode to switch automatically between MS and MS/MS acquisition. Survey full-scan MS spectra with two microscans (m/z 300-1800) were acquired in the Obitrap with a mass resolution of 60,000 at m/z 400, followed by ten sequential LTQ-MS/MS scans. Dynamic exclusion was used with two repeat counts, 10-s repeat duration, and 90-s exclusion duration. For MS/MS, precursor ions were activated using 35% normalized

©2016 American Diabetes Association. Published online at http://care.diabetesjournals.org/lookup/suppl/doi:10.2337/dc16-1529/-/DC1

collision energy at the default activation q of 0.25.

Peptide sequencing and data interpretation

All MS/MS spectrums were identified by using SEQUEST [v.28 (revision 12), Thermo Electron Corp.] against the Uniprot database. To reduce false positive identification results, a decoy database containing the reverse sequences was appended to the database. The searching parameters were set up as follows: partial trypsin (KR) cleavages with two missed cleavages were considered, the variable modification was oxidation of methionine, the peptide mass tolerance was 50 ppm, and the fragment ion tolerance was 1 Da. Trans Proteomic Pipeline software (revision 4.0) (Institute of Systems Biology, Seattle, WA) was then utilized to identify proteins based upon corresponding peptide sequences with ≥95% confidence. The peptides results were filtered by Peptide Prophet2 with a p-value over 0.90 and a Protein Prophet3 probability of 0.95 was used for the protein identification results.

©2016 American Diabetes Association. Published online at http://care.diabetesjournals.org/lookup/suppl/doi:10.2337/dc16-1529/-/DC1

SUPPLEMENTARY DATA

Supplementary Figure S1. Classification of different proteins based on relevant biological processes (Gene Ontology terms).

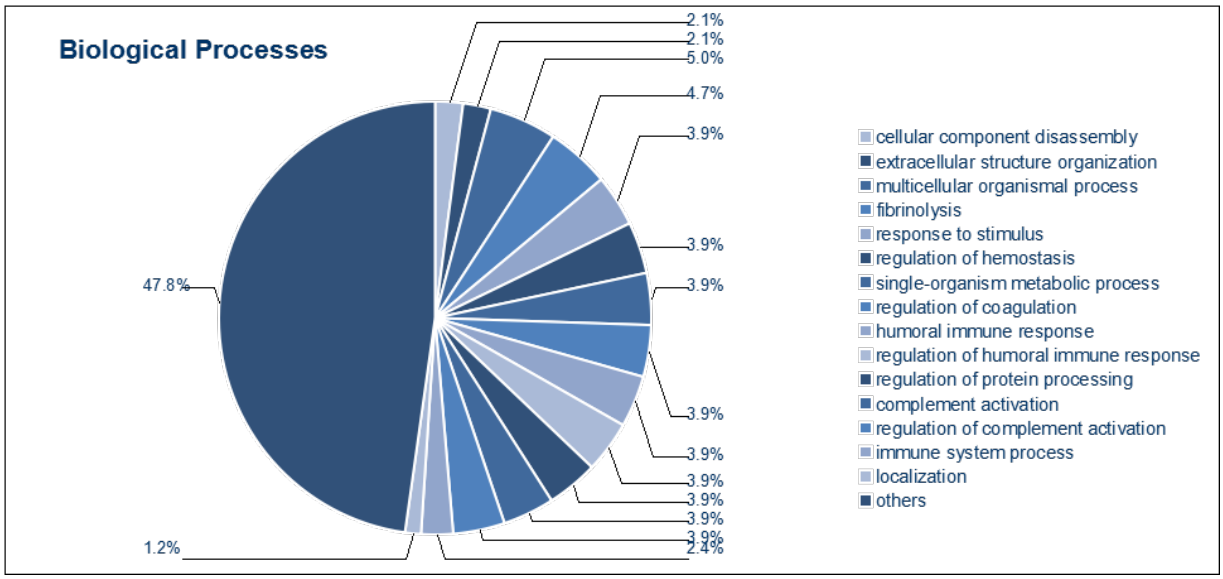

©2016 American Diabetes Association. Published online at http://care.diabetesjournals.org/lookup/suppl/doi:10.2337/dc16-1529/-/DC1

Supplementary Figure S2. Pathway analysis using the Kyoto Encyclopedia of Genes and Genomes (KEGG) Pathway database. Red round denote the detected proteins. Complement and coagulation cascades were relevant to diabetic retinopathy proteome analyzed by using the Kyoto Encyclopedia of Genes and Genomes (KEGG) Pathway database. They are composed of Complement Component 3 (Gene symbol: C3), Complement Component 9 (C9), Plasminogen (PLG), Coagulation Factor II [Thrombin] (F2), Serpin Peptidase Inhibitor, Clade C [Antithrombin], Member 1 (SERPINC1), Serpin Peptidase Inhibitor, Clade A [Antitrypsin], Member 1 (SERPINA1), Serpin Peptidase Inhibitor, Clade A [Antitrypsin], Member 5 (SERPINA5), and Alpha-2-Macroglobulin (A2M).

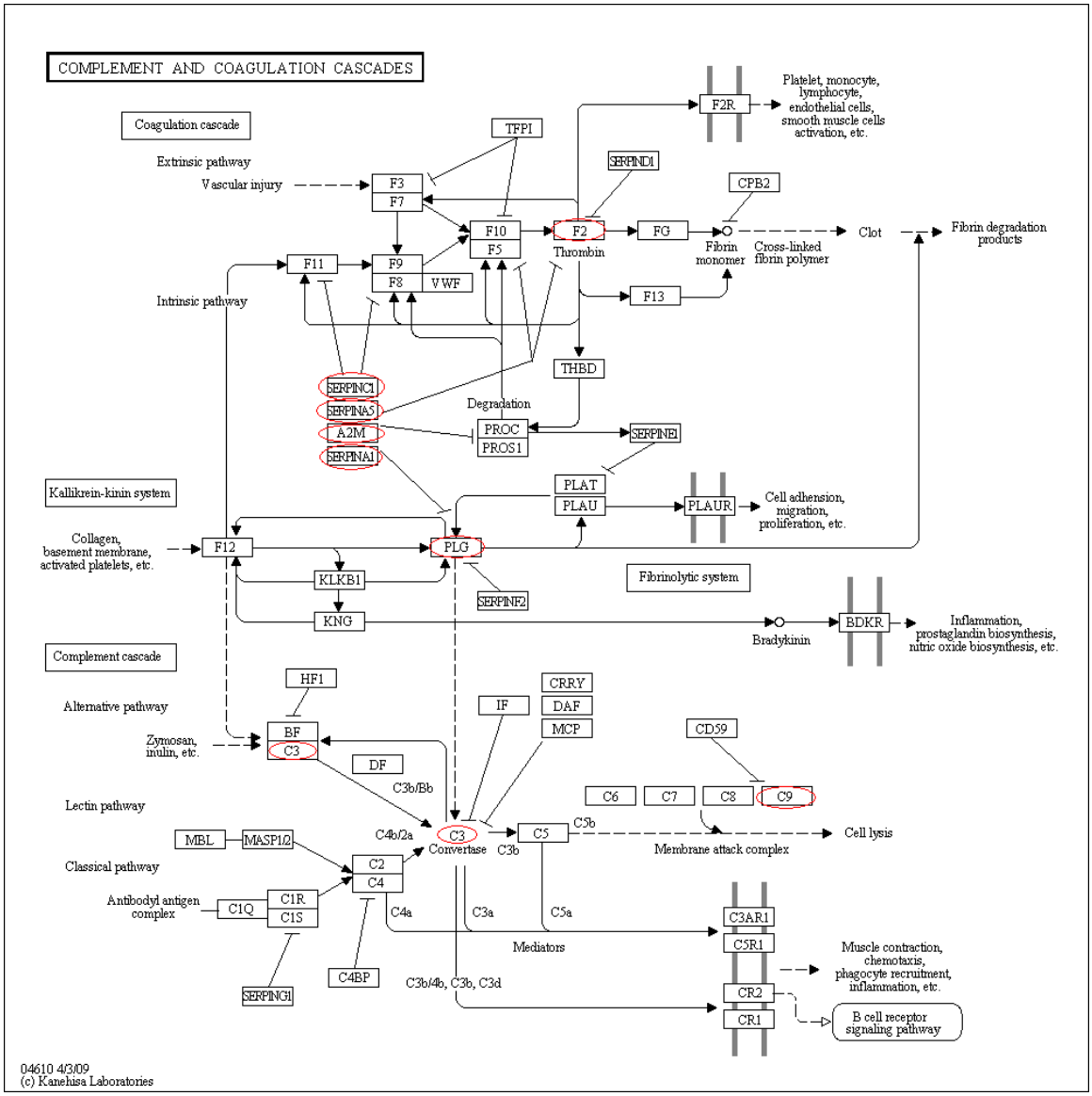

©2016 American Diabetes Association. Published online at http://care.diabetesjournals.org/lookup/suppl/doi:10.2337/dc16-1529/-/DC1

SUPPLEMENTARY DATA

SupplementaryTable S1. Urine proteins differentially expressed in patients with PDR (cases) compared with NDR (control) subjects detected by 2D-Nano-LC-ESI-MS/MS.

	Swiss-Prot accession no.	DESC (protein name)	RC-Controls	RC-Cases	Cases / Controls
1	**P00738**	**Haptoglobin**	**0.00059126**	**0.00514045**	**8.69**
2	**P01023**	**Alpha-2-macroglobulin**	**0.00024358**	**0.00138041**	**5.67**
3	P01024	Complement C3	0.00093044	0.00509166	5.47
4	P06727	Apolipoprotein A-IV	0.00061915	0.00305219	4.93
5	P00734	Prothrombin	0.00062639	0.00263269	4.20
6	P01833	Polymeric immunoglobulin receptor	0.00042337	0.00161708	3.82
7	P02748	Complement component C9	0.00048212	0.00163104	3.38
8	P01008	Antithrombin-III	0.00206674	0.00679820	3.29
9	P02774	Vitamin D-binding protein	0.00440334	0.01309005	2.97
10	P04264	Keratin, type II cytoskeletal 1	0.00029282	0.00078827	2.69
11	P02787	Serotransferrin	0.01118364	0.02915683	2.61
12	Q02487	Desmocollin-2	0.00035537	0.00092526	2.60
13	P00747	Plasminogen	0.00144527	0.00372135	2.57
14	P43652	Afamin	0.00120209	0.00295132	2.46
15	P02763	Alpha-1-acid glycoprotein 1	0.01500695	0.03684422	2.46
16	P07339	Cathepsin D	0.00067894	0.00165035	2.43
17	P01009	Alpha-1-antitrypsin	0.00906260	0.02092084	2.31
18	P02790	Hemopexin	0.00756365	0.01682195	2.22
19	P08571	Monocyte differentiation antigen CD14	0.00268341	0.00592885	2.21
20	P11684	Uteroglobin	0.00689811	0.01467408	2.13
21	P02647	Apolipoprotein A-I	0.00132409	0.00275549	2.08
22	**P02768**	**Albumin**	**0.09169547**	**0.16703177**	**1.82**
23	P00450	Ceruloplasmin	0.00446999	0.00766682	1.72
24	P01876	Ig alpha-1 chain C region	0.00668179	0.01062902	1.59
25	P31949	Protein S100-A11	0.00166362	0.00261723	1.57
26	P04430	Ig kappa chain V-I region BAN	0.00350348	0.00494102	1.41
27	P01871	Ig mu chain C region	0.00156812	0.00212605	1.36
28	Q14624	Inter-alpha-trypsin inhibitor heavy chain H4	0.00362359	0.00481427	1.33
29	P10909	Clusterin	0.00115864	0.00150618	1.30
30	P01834	Ig kappa chain C region	0.11655522	0.14889143	1.28
31	P02751	Fibronectin	0.00088819	0.00112692	1.27
32	P51884	Lumican	0.00280482	0.00352006	1.26
33	P02760	Protein AMBP	0.05225252	0.06516556	1.25
34	P02679	Fibrinogen gamma chain	0.00067745	0.00084292	1.24
35	P06702	Protein S100-A9	0.00484802	0.00590691	1.22
36	P01011	Alpha-1-antichymotrypsin	0.00276842	0.00321161	1.16
37	P01717	Ig lambda chain V-IV region Hil	0.00352081	0.00404816	1.15
38	P05155	Plasma protease C1 inhibitor	0.00323803	0.00354699	1.10
39	P01842	Ig lambda chain C regions	0.03129380	0.03362343	1.07
40	P02753	Retinol-binding protein 4	0.01174191	0.01171270	1.00
41	P02671	Fibrinogen alpha chain	0.00247775	0.00224212	0.90
42	P80748	Ig lambda chain V-III region LOI	0.00560487	0.00505243	0.90
43	P04217	Alpha-1B-glycoprotein	0.00669610	0.00587086	0.88

©2016 American Diabetes Association. Published online at http://care.diabetesjournals.org/lookup/suppl/doi:10.2337/dc16-1529/-/DC1

44	P01766	Ig heavy chain V-III region TEI	0.00821295	0.00695146	0.85
45	P16070	CD44 antigen	0.00288058	0.00237612	0.82
46	P01611	Ig kappa chain V-I region Wes	0.00335997	0.00273515	0.81
47	P05164	Myeloperoxidase	0.00032544	0.00026481	0.81
48	P06396	Gelsolin	0.00231743	0.00185659	0.80
49	P61769	Beta-2-microglobulin	0.00559657	0.00436297	0.78
50	Q9Y5Y7	Lymphatic vessel endothelial hyaluronic acid receptor 1	0.00236315	0.00182168	0.77
51	P05451	Lithostathine-1-beta	0.00510423	0.00389085	0.76
52	P02765	Alpha-2-HS-glycoprotein	0.01245975	0.00943645	0.76
53	P61626	Lysozyme C	0.00102730	0.00077316	0.75
54	P12830	Epithelial cadherin	0.00125621	0.00093515	0.74
55	P07737	Profilin-1	0.00155345	0.00115576	0.74
56	P13473	Lysosome-associated membrane glycoprotein 2	0.00330616	0.00245881	0.74
57	P15289	Arylsulfatase A	0.00071791	0.00052218	0.73
58	P19652	Alpha-1-acid glycoprotein 2	0.01753529	0.01266911	0.72
59	P02750	Leucine-rich alpha-2-glycoprotein	0.00922714	0.00648921	0.70
60	P04004	Vitronectin	0.00095168	0.00066209	0.70
61	P02675	Fibrinogen beta chain	0.00112591	0.00076814	0.68
62	P05543	Thyroxine-binding globulin	0.00350591	0.00223895	0.64
63	Q6UXB8	Peptidase inhibitor 16	0.00297350	0.00183588	0.62
64	P01597	Ig kappa chain V-I region DEE	0.01981512	0.01184159	0.60
65	O60814	Histone H2B type 1-L	0.00590438	0.00338580	0.57
66	P01042	Kininogen-1	0.00653996	0.00368149	0.56
67	P25311	Zinc-alpha-2-glycoprotein	0.01381879	0.00771821	0.56
68	P01613	Ig kappa chain V-I region Ni	0.01111278	0.00578353	0.52
69	P01857	Ig gamma-1 chain C region	0.01676707	0.00869861	0.52
70	P05154	Plasma serine protease inhibitor	0.00206125	0.00103088	0.50
71	Q6EMK4	Vasorin	0.00314060	0.00153788	0.49
72	P98160	Basement membrane-specific heparan sulfate proteoglycan core protein	0.00201377	0.00093378	0.46
73	P14780	Matrix metalloproteinase-9	0.00047918	0.00019420	0.41
74	P07911	Uromodulin	0.02686819	0.01082433	0.40
75	P10451	Osteopontin	0.00196368	0.00077375	0.39
76	P04433	Ig kappa chain V-III region VG (Fragment)	0.00677586	0.00260674	0.38
77	P55290	Cadherin-13	0.00264007	0.00095426	0.36
78	P00915	Carbonic anhydrase 1	0.00180307	0.00057448	0.32
79	P41222	Prostaglandin-H2 D-isomerase	0.04896517	0.01502873	0.31
80	Q08380	Galectin-3-binding protein	0.00227416	0.00069107	0.30
81	Q8IWU5	Extracellular sulfatase Sulf-2	0.00130196	0.00038802	0.30
82	Q16270	Insulin-like growth factor-binding protein 7	0.00217975	0.00064017	0.29
83	P15941	Mucin-1	0.00341439	0.00074719	0.22
84	O43451	Putative maltase-glucoamylase-like protein FLJ16351	0.00046434	0.00009055	0.20
85	Q8WVN6	Secreted and transmembrane protein 1	0.02726495	0.00473759	0.17
86	O00468	Agrin	0.00053201	0.00008939	0.17
87	Q01459	Di-N-acetylchitobiase	0.00336347	0.00042036	0.12
88	P12109	Collagen alpha-1(VI) chain	0.00124886	0.00014185	0.11

©2016 American Diabetes Association. Published online at http://care.diabetesjournals.org/lookup/suppl/doi:10.2337/dc16-1529/-/DC1

89	Q12907	Vesicular integral-membrane protein VIP36	0.00341897	0.00037201	0.11

©2016 American Diabetes Association. Published online at http://care.diabetesjournals.org/lookup/suppl/doi:10.2337/dc16-1529/-/DC1

Supplementary Table S2. Urine proteins only expressed in patients with PDR (cases) detected by 2D-Nano-LC-ESI-MS/MS.

	Swiss-Prot accession	DESC (protein name)	RC
1	P02766	Transthyretin	0.00949000
2	P06331	Ig heavy chain V-II region ARH-77	0.00598500
3	P01621	Ig kappa chain V-III region NG9 (Fragment)	0.00560000
4	P06310	Ig kappa chain V-II region RPMI 6410	0.00459500
5	O43653	Prostate stem cell antigen	0.00453000
6	P0C0L5	Complement C4-B	0.00449000
7	Q96PD5	N-acetylmuramoyl-L-alanine amidase	0.00338000
8	P01700	Ig lambda chain V-I region WAH	0.00322500
9	P01019	Angiotensinogen	0.00317500
10	P00746	Complement factor D	0.00313500
11	P01610	Ig kappa chain V-I region WEA	0.00291000
12	Q9UNN8	Endothelial protein C receptor	0.00277500
13	P24592	Insulin-like growth factor-binding protein 6	0.00276500
14	Q8TBN0	Guanine nucleotide exchange factor for Rab3A	0.00214000
15	P01714	Ig lambda chain V-III region SH	0.00200000
16	P01767	Ig heavy chain V-III region BUT	0.00178500
17	P36955	Pigment epithelium-derived factor	0.00176000
18	P02656	Apolipoprotein C-III	0.00173500
19	P02042	Hemoglobin subunit beta	0.00172500
20	P43251	Biotinidase	0.00148500
21	P19823	Inter-alpha-trypsin inhibitor heavy chain H2	0.00141500
22	Q9NS71	Gastrokine-1	0.00112000
23	P60709	Actin, cytoplasmic 2	0.00106900
24	Q92520	Protein FAM3C	0.00102100
25	Q68CZ6	Uncharacterized protein C4orf15	0.00097000
26	P07360	Complement component C8 gamma chain	0.00096350
27	P09668	Cathepsin H	0.00094000
28	Q8WWY8	Lipase member H	0.00093750
29	P18428	Lipopolysaccharide-binding protein	0.00088000
30	P15309	Prostatic acid phosphatase	0.00069750
31	P24855	Deoxyribonuclease-1	0.00065350
32	P15259	Phosphoglycerate mutase 1	0.00063550
33	P08294	Extracellular superoxide dismutase [Cu-Zn]	0.00063250
34	P35858	Insulin-like growth factor-binding protein complex acid labile chain	0.00062700
35	O00560	Syntenin-1	0.00061050
36	P07602	Proactivator polypeptide	0.00055550
37	P13646	Keratin, type I cytoskeletal 13	0.00053800
38	P10643	Complement component C7	0.00047250
39	P02538	Keratin, type II cytoskeletal 6C	0.00043750
40	P04406	Glyceraldehyde-3-phosphate dehydrogenase	0.00039350
41	P29508	Serpin B3	0.00036350
42	P04278	Sex hormone-binding globulin	0.00035150
43	P09467	Fructose-1,6-bisphosphatase 1	0.00030200
44	P13671	Complement component C6	0.00029000

©2016 American Diabetes Association. Published online at http://care.diabetesjournals.org/lookup/suppl/doi:10.2337/dc16-1529/-/DC1

45	P11597	Cholesteryl ester transfer protein	0.00027300
46	Q9UK55	Protein Z-dependent protease inhibitor	0.00026050
47	Q96RW7	Hemicentin-1	0.00013445
48	P01031	Complement C5	0.00008555
49	P98164	Low-density lipoprotein receptor-related protein 2	0.00004150
50	Q5VST9	Obscurin	0.00003905

©2016 American Diabetes Association. Published online at http://care.diabetesjournals.org/lookup/suppl/doi:10.2337/dc16-1529/-/DC1

Supplementary Table S3. Urine proteins only expressed in patients with NDR (controls) detected by 2D-Nano-LC-ESI-MS/MS.

	Swiss-Prot accession	DESC (protein name)	RC
1	P10153	Non-secretory ribonuclease	0.01995000
2	P60022	Beta-defensin 1	0.01890000
3	Q6GTX8	Leukocyte-associated immunoglobulin-like receptor 1	0.00857500
4	Q96FE7	Phosphoinositide-3-kinase-interacting protein 1	0.00553000
5	Q96DA0	Uncharacterized protein UNQ773/PRO1567	0.00436500
6	Q14508	WAP four-disulfide core domain protein 2	0.00434500
7	P07998	Ribonuclease pancreatic	0.00397500
8	Q9GZX9	Twisted gastrulation protein homolog 1	0.00393000
9	O75594	Peptidoglycan recognition protein	0.00369500
10	P07858	Cathepsin B	0.00351500
11	Q8IYS5	Osteoclast associated immunoglobulin-like receptor	0.00338000
12	P01591	Immunoglobulin J chain	0.00333000
13	O60635	Tetraspanin-1	0.00325500
14	P68871	Hemoglobin subunit beta	0.00323000
15	P05090	Apolipoprotein D	0.00288500
16	P02788	Lactotransferrin	0.00281500
17	Q86SR0	Secreted Ly-6/uPAR-related protein 2	0.00275000
18	P01040	Cystatin-A	0.00256000
19	P04279	Semenogelin-1	0.00234500
20	O00187	Mannan-binding lectin serine protease 2	0.00225500
21	P10253	Lysosomal alpha-glucosidase	0.00225000
22	P08311	Cathepsin G	0.00193000
23	P35754	Glutaredoxin-1	0.00191000
24	Q16769	Glutaminyl-peptide cyclotransferase	0.00157500
25	P04083	Annexin A1	0.00154000
26	P01877	Ig alpha-2 chain C region	0.00151500
27	P01133	Pro-epidermal growth factor	0.00149500
28	P13796	Plastin-2	0.00127000
29	O95497	Pantetheinase	0.00124200
30	Q8NFZ8	Cell adhesion molecule 4	0.00104750
31	P0C0L4	Complement C4-B	0.00104350
32	P05452	Tetranectin	0.00102450
33	Q5JS37	NHL repeat-containing protein 3	0.00095300
34	Q02383	Semenogelin-2	0.00094750
35	P26842	CD27 antigen	0.00090500
36	O75626	PR domain zinc finger protein 1	0.00087800
37	Q9HCN6	Platelet glycoprotein VI	0.00060400
38	O75882	Attractin	0.00056100
39	O60494	Cubilin	0.00055900
40	P19022	Cadherin-2	0.00053600
41	P35908	Keratin, type II cytoskeletal 2 epidermal	0.00050050
42	P06733	Alpha-enolase	0.00049150
43	A5A3E0	ANKRD26-like family C member 1A	0.00047250
44	P19320	Vascular cell adhesion protein 1	0.00042650

©2016 American Diabetes Association. Published online at http://care.diabetesjournals.org/lookup/suppl/doi:10.2337/dc16-1529/-/DC1

45	P16278	Beta-galactosidase	0.00035150
46	Q16849	Receptor-type tyrosine-protein phosphatase-like N	0.00034450
47	Q99715	Collagen alpha-1(XII) chain	0.00009050

©2016 American Diabetes Association. Published online at http://care.diabetesjournals.org/lookup/suppl/doi:10.2337/dc16-1529/-/DC1

Supplementary Table S4. Logistic regression analysis for association between urine haptoglobin and chronic renal function insufficiency (CRI).

	B	S.E.	Wald	df	Sig.	Exp(B)
UHER	.002	.001	4.582	1	.032	1.002
UAER	.000	.000	4.001	1	.045	1.000
Sex	-.920	.790	1.358	1	.244	.398
Age	.057	.030	3.475	1	.062	1.058
BMI	-.172	.089	3.724	1	.054	.842
SBP	.028	.015	3.622	1	.057	1.029
eGFR0	.034	.026	1.685	1	.194	1.034
HbA1c	-.107	.139	.588	1	.443	.899
Duration of DM	.012	.038	.107	1	.743	1.012
Constant	-6.939	3.188	4.738	1	.029	.001

Variable(s) entered on step: UHER, UAER, Sex, Age, BMI, SBP, eGFR0, HbA1c, Duration of DM.

©2016 American Diabetes Association. Published online at http://care.diabetesjournals.org/lookup/suppl/doi:10.2337/dc16-1529/-/DC1

Supplementary Table S5. Area Under the Curve

Test Result Variable(s)	Area	Std. Error[a]	Asymptotic Sig.[b]	Asymptotic 95% Confidence Interval	
				Lower Bound	Upper Bound
UAER	.761	.061	.000	.640	.881
UHER	.737	.057	.000	.625	.848
Combination	.785	.052	.000	.683	.888

The test result variable(s): UAER, UHER has at least one tie between the positive actual state group and the negative actual state group. Statistics may be biased.

a. Under the nonparametric assumption

b. Null hypothesis: true area = 0.5

©2016 American Diabetes Association. Published online at http://care.diabetesjournals.org/lookup/suppl/doi:10.2337/dc16-1529/-/DC1